Nomenclature

Y M 86 A 1 G - V 10 0

Product Type

Capacity at Rating Point, 50Hz: X 100 Watt

Application
- H - A/C & Chiller
- M - Mid. Temp.
- F - Low Temp.
- W - Heat Pump

A - R22
or Other Refrigerants Application in 3GS Oil

C - R410A

E - R404A
or Other Refrigerants Application in POE Oil

J - R134a

T - R407C
or Other Refrigerants Application in POE Oil

Remarks: Pls Confirm with InvoTech for Refrigerants that Not Been Involved.

1 - 3ph/380-420V/50Hz
or 3ph/460V/60Hz

2 - 1ph/220V/50Hz

3 - 1ph/220V/60Hz

5 - 3ph/380V/60Hz

6 - 3ph/220V/50Hz

7 - 3ph/220V/60Hz

8 - 3ph/575V/60Hz

Default - None

G - Sight Glass and Welding Joint

S - Sight Glass and Screw Joint

Model Code
- Default - None
- V - Vapor Injection
- Q - Liquid Injection

Accessory Code

Engineering Code

Y S F 90 E 1 G - V 10 0

Product Type

Semi-Hermetic Scroll

Capacity at Rating Point, 50Hz: X 100 Watt

Application
- F - Low Temp.

A - R22
or Other Refrigerants Application in 3GS Oil

E - R404A
or Other Refrigerants Application in POE Oil

1 - 380~420V/3PH/50HZ

4 - 460V/3PH/60HZ

5 - 380V/3PH/60HZ

7 - 220V/3PH/60HZ

G - Sight Glass and Welding Joint

Model Code
- V - Vapor Injection

Accessory Code
- 20 - Enhanced Type Controll Board
- 10 - Standard Type Controll Board

Engineering Code

YH/YSH Series

For A/C and Chiller

Model	Electricity V/HZ	Phase	Power (HP)	Displ. m³/h	Cooling Capacity (W)	Power in Watt (W)	COP (W/W)	Running Current (A)	Dimensions
R407C									
YH69T2-100	220V/50HZ	1	2	6.7	6530	2200	2.96	10.4	P14
YH89T2-100	220V/50HZ	1	3	8.6	8540	2827	3.02	13.4	P14
YH104T2-100	220V/50HZ	1	3.5	10.3	10180	3250	3.13	15.4	P14
YH119T2-100	220V/50HZ	1	4	11.5	11420	3660	3.12	17.3	P14
YH128T2-100	220V/50HZ	1	4.3	12.4	12290	3870	3.18	18.4	P14
YH69T1-100	380V/50HZ	3	2	6.7	6530	2160	3.02	4.8	P14
YH89T1-100	380V/50HZ	3	3	8.6	8540	2680	3.19	5.3	P14
YH104T1-100	380V/50HZ	3	3.5	10.3	10180	3190	3.19	6.6	P14
YH119T1-100	380V/50HZ	3	4	11.5	11420	3550	3.22	7.1	P14
YH128T1-100	380V/50HZ	3	4.3	12.4	12290	3750	3.28	7.6	P14
YH133T1-100	380V/50HZ	3	4.5	12.9	12770	3900	3.27	7.8	P14
YH140T1-100	380V/50HZ	3	4.7	13.5	13440	4130	3.25	8.0	P14
YH150T1-100	380V/50HZ	3	5	14.5	14400	4410	3.27	8.4	P14
YH175T1-100	380V/50HZ	3	6	16.9	16510	5030	3.28	9.1	P14
YH200T1-100	380V/50HZ	3	7	18.7	19200	5950	3.23	11.5	P15
YH230T1-100	380V/50HZ	3	8	21.4	22180	6770	3.28	12.9	P15
YH266T1-100	380V/50HZ	3	9	24.7	25530	7780	3.28	14.8	P15
YH307T1-100	380V/50HZ	3	10	29.1	29470	8910	3.31	15.6	P15
YH355T1-100	380V/50HZ	3	12	32.9	34080	10240	3.33	17.8	P15
YSH400T1G-100	380V/50HZ	3	13	37.7	38976	12060	3.23	21.5	P23
YSH450T1G-100	380V/50HZ	3	15	42.5	43968	13605	3.23	24.4	P23

Ambient Temp. 35°C, E.T. 7.2°C, C.T. 54.4°C, Subcooling 8.3K, R.G.T. 18.3°C

Product Dimensions

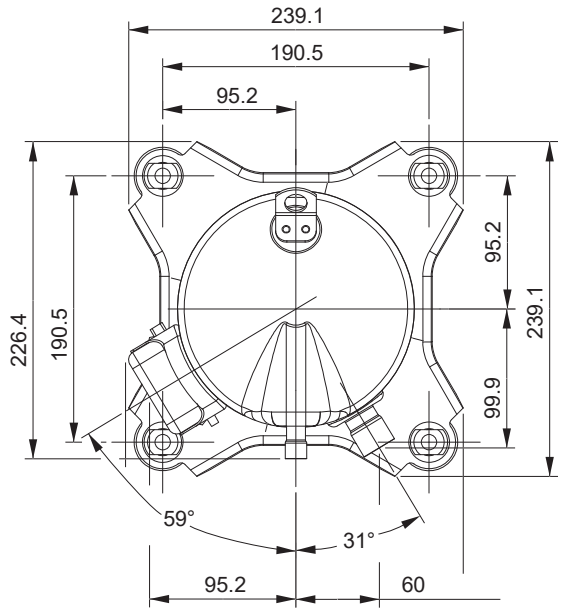

Wiring Diagram

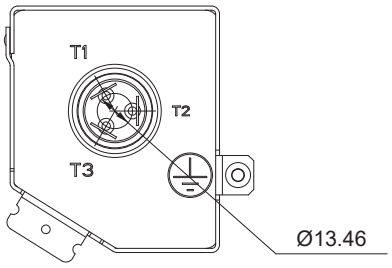

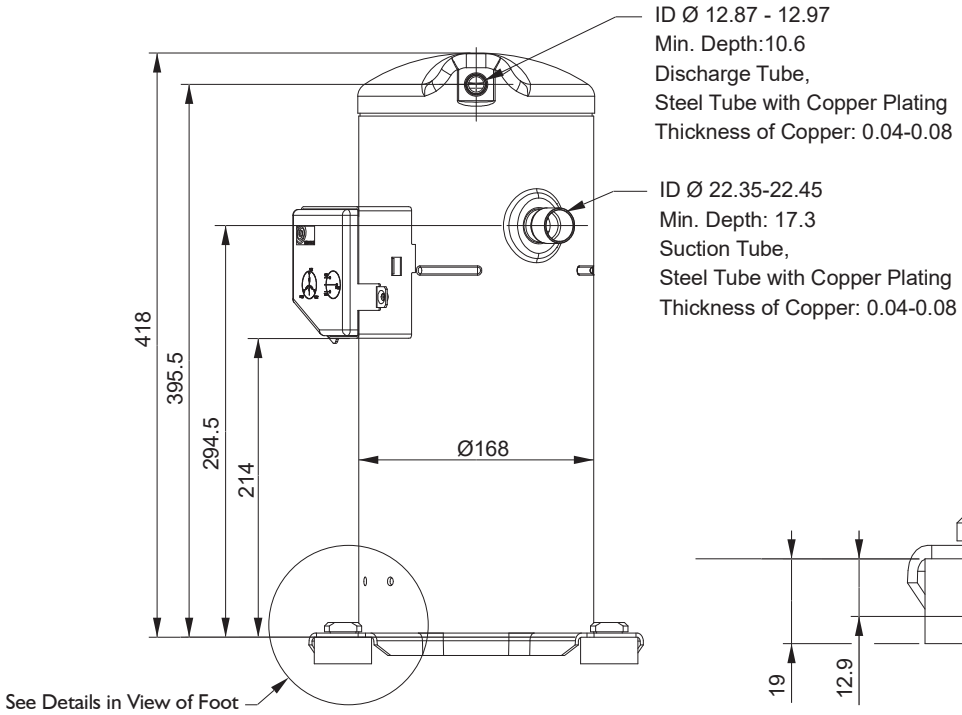

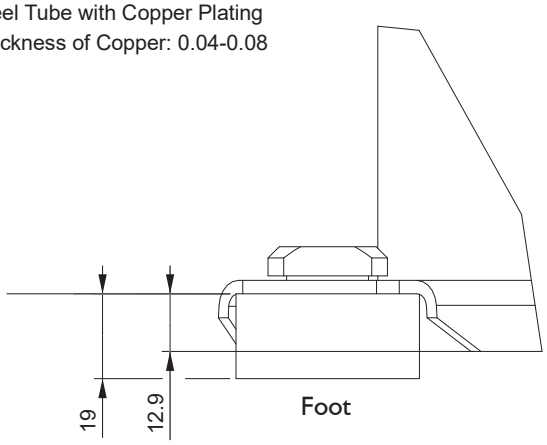
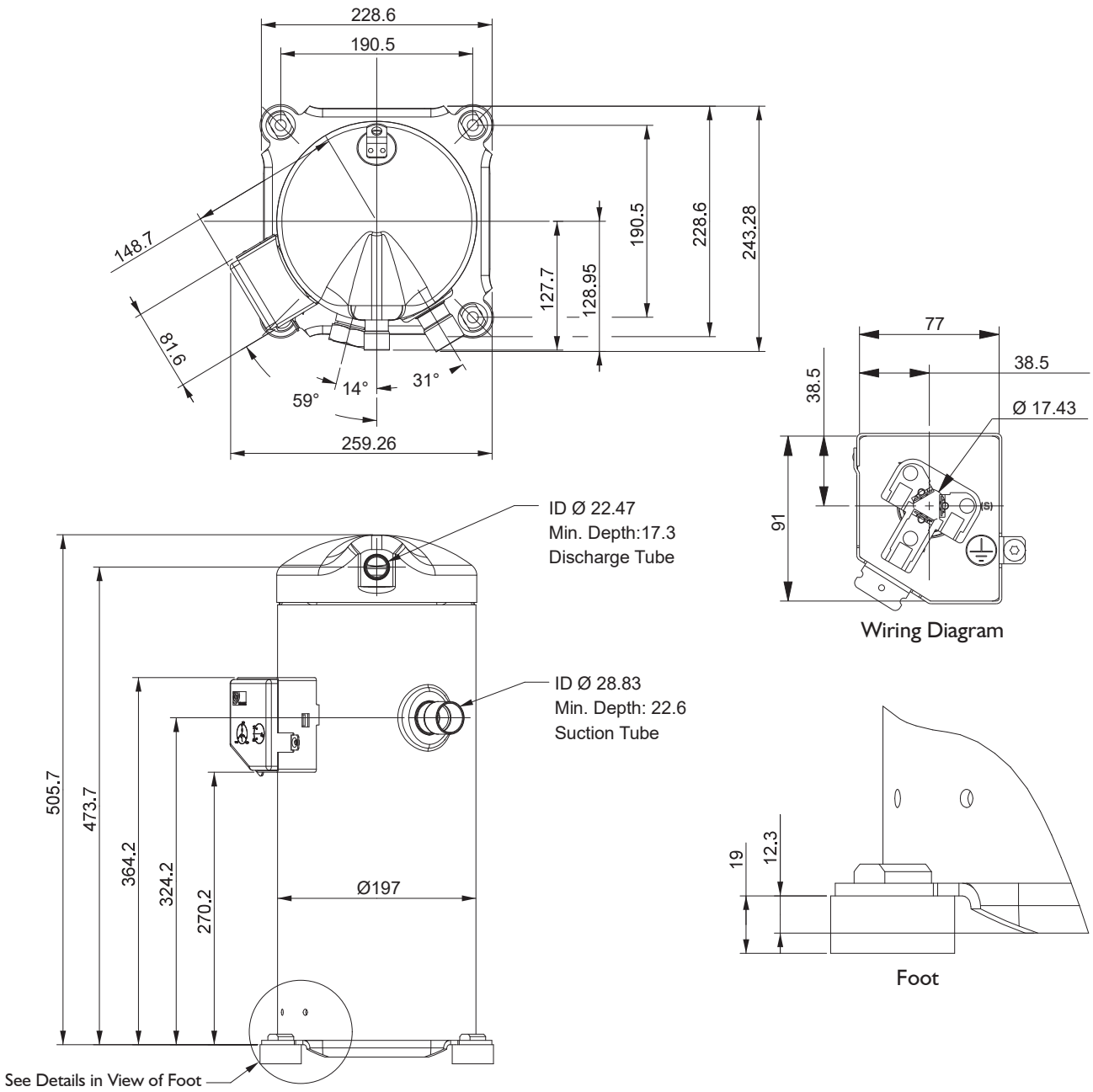
Product Dimensions